Штревели



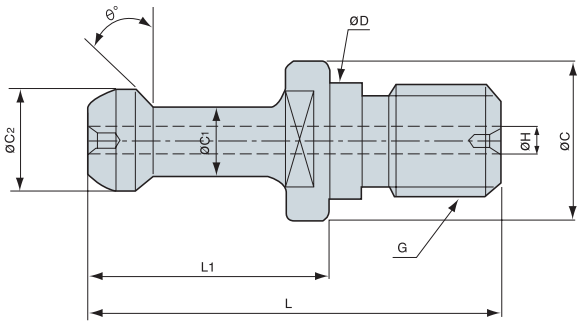

(мм)

Обозначение	ØD	ØC	ØC1	ØC2	L1	L	θ	G	ØH
P30T-1	12.5	16.5	7	11	23	43	45°	M12	
P30T-2	12.5	16.5	7	11	23	43	30°	M12	
P40T-1	17	23	10	15	35	60	45°	M16	
P40T-1(3)	17	23	10	15	35	60	45°	M16	Ø3
P40T-2	17	23	10	15	35	60	30°	M16	
P40T-2(3)	17	23	10	15	35	60	30°	M16	Ø3
PS40-3F	17	23	10	15	35	60	0°	M16	
PS40-1F	17	23	10	15	29.6	54.6	0°	M16	
PS-G51	17	22	12.45	18.80	19.11	44.11	45°	M16	Ø7
MP-40	17	23	10	15	25	50	0°	M16	
DIN69872-A40	17	23	14	19	26	54	15°	M16	Ø7
DIN69872-B40	17	23	14	19	26	54	15°	M16	
ISO7388/A40	17	23	14	19	26	54	15°	M16	Ø7
ISO7388/B40	17	22.5	12.95	18.95	16.4	44.5	45°	M16	Ø7.35
JISB6339-A40(PS-806)	17	23	14	19	29	54	15°	M16	Ø7
JISB6339-B40(PS-805)	17	23	14	19	29	54	15°	M16	
P50T-1	25	38	17	23	45	85	45°	M24	
P50T-1(7)	25	38	17	23	45	85	45°	M24	Ø7
P50T-2	25	38	17	23	45	85	30°	M24	
P50T-2(7)	25	38	17	23	45	85	30°	M24	Ø7
PS50-1F	25	38	17	23	45	85	0°	M24	
PS50-1FH	25	38	17	23	45	85	0°	M24	Ø8
PS50-1L	25	38	16	22	72	110	30°	M24	
PS50-2L	25	39	18	25	55	95	30°	M24	
PS50-3L	25	39.3	18	23	64	104	R4	M24	
PS50-4L	25	39	15	21	63.1	105.1	45°	M24	
PS-G41	25	37	20.83	28.96	25.2	65.2	45°	M24	Ø10
MP-50	25	36	18	24	31	71	0°	M24	
DIN69872-A50	25	36	21	28	34	74	15°	M24	Ø11.5
DIN69872-B50	25	36	21	28	34	74	15°	M24	O-Ring
ISO7388/A50	25	36	21	28	34	74	15°	M24	Ø11.5
ISO7388/B50	25	37	19.6	29.1	25.55	65.5	45°	M24	Ø11.5
JISB6339-A50	25	38	21	28	34	74	15°	M24	Ø10
JISB6339-B50	25	38	21	28	34	74	15°	M24	