L Типы хвостовиков

● Конус Морзе (с лапкой)

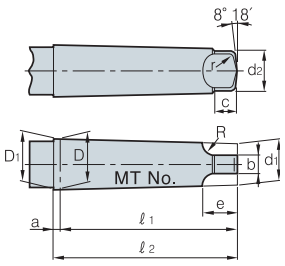

MT No.	Конусность	Угол наклона(α)	D	a	D1	d1	ℓ1	ℓ2	d2	b	c	e	R	r
0	1/19.212	1°29′27″	9.045	3	9.201	6.104	56.5	59.5	6.0	3.9	6.5	10.5	4	1
1	1/20.047	1°25′43″	12.065	3.5	12.240	8.972	62.0	65.5	8.7	5.2	8.5	13.5	5.	1.2
2	1/20.020	1°25′50″	17.780	5	18.030	14.034	75.0	80.0	13.5	6.3	10	16	6	1.6
3	1/19.922	1°26′16″	23.825	5	24.076	19.107	94.0	99.0	18.5	7.9	13	20	7	2
4	1/19.254	1°29′15″	31.267	6.5	31.605	25.164	117.5	124.0	24.5	11.9	16	24	8	2.5
5	1/19.002	1°30′26″	44.399	6.5	4.741	36.531	149.5	156.0	35.7	15.9	19	29	10	3
6	1/19.180	1°29′36″	63.348	8	63.765	52.399	210.0	218.0	51.0	19.0	27	40	13	4
7	1/19.231	1°29′22″	83.058	10	83.578	68.186	286.0	296.0	66.8	28.6	35	54	19	5

● Конус Морзе (под винт)

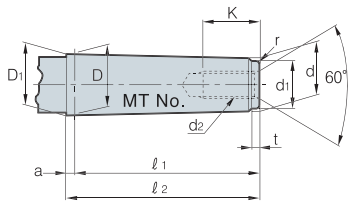

MT No.	Конусность	Угол наклона(α)	D	a	D1	d	ℓ1	ℓ2	d1	d2	k	t	r
0	1/19.212	1°29′27″	9.045	3	9.201	6.442	50	53	6	-		4	0.2
1	1/20.047	1°25′43″	12.065	3.5	12.230	9.396	53.5	57	9	M6	16	5	0.2
2	1/20.020	1°25′50″	17.780	5	18.030	14.583	64	69	14	M10	24	5	0.2
3	1/19.922	1°26′16″	23.825	5	24.076	19.759	81	86	19	M12	28	7	0.6
4	1/19.254	1°29′15″	31.267	6.5	31.605	25.943	02.5	109	25	M16	32	9	1
5	1/19.002	1°30′26″	44.399	6.5	4.741	37.584	129.5	136	35.7	M20	40	9	2.5
6	1/19.180	1°29′36″	63.348	8	63.765	53.859	182	190	51	M24	50	12	4
7	1/19.231	1°29′22″	83.058	10	83.578	70.058	250	260	65	M33	80	18.5	5

● Укороченный кону с «Brown sharp» (под винт)

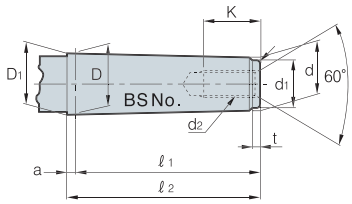

B&S No.	D	a	D1	d	d1	ℓ1	ℓ2	t	r	d2	K
4	10.221	2.4	10.321	8.890	8.0	31.0	34.2	2	0.2	-	-
5	13.286	2.4	13.386	11.430	10.0	44.4	46.8	3	0.2	-	-
6	15.229	2.4	15.330	12.700	11.0	60.0	62.7	3	0.2	M 8(1/4)	20
7	18.424	2.4	18.524	15.240	14.0	76.2	78.6	4	0.2	M10(3/8)	24
8	22.828	3.2	22.962	19.090	17.0	90.5	93.7	4	0.6	M12(1/2)	28
9	27.104	3.2	27.238	22.863	21.0	101.6	104.8	4	0.6	M12(1/2)	28
10	32.749	3.2	32.887	26.534	24.0	144.5	147.7	5	1.0	M16(5/8)	32
11	38.905	3.2	39.039	31.749	29.0	171.4	174.6	5	1.0	M16(5/8)	32
12	45.641	3.2	45.774	38.103	35.0	181.0	184.2	6	2.5	M20(3/4)	40
13	52.654	3.2	52.787	44.451	41.0	196.8	200.0	6	3.0	M20(3/4)	40
14	59.533	3.2	59.666	50.800	47.0	209.6	212.8	7	4.0	M24(1)	40
15	66.408	3.2	66.541	57.150	53.0	222.2	225.4	7	4.0	M24(1)	50
16	73.292	3.2	73.425	63.500	59.0	35.0	238.2	8	5.0	M30(11/8)	60

● Укороченный конус «Brown sharp» (с лапкой)

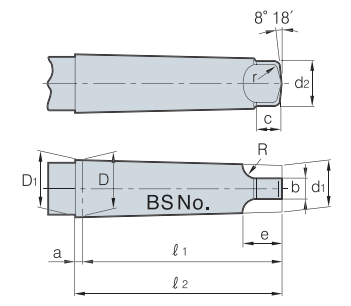

B&S No.	D	a	D1	d1	d2	ℓ1	ℓ2	b	c	e	R	r
4	10.221	2.4	10.321	8.458	8.1	42.1	44.5	5.5	8.7	14.4	7.9	1.3
5	13.286	2.4	13.386	10.962	10.7	55.6	58.0	6.3	9.5	16.2	7.9	1.5
6	15.229	2.4	15.330	12.167	11.7	73.0	75.4	7.1	11.1	18.0	7.9	1.5
7	18.424	2.4	18.524	14.675	14.2	89.7	92.1	7.9	11.9	20.3	9.5	1.8
8	22.828	3.2	22.962	18.453.	18.0	104.8	108.0	8.7	12.7	22.0	9.5	2.0
9	28.104	3.2	27.238	22.200	21.8	117.5	120.7	9.5	14.3	25.4	11.1	2.5
10	32.749	3.2	32.887	25.751	25.7	162.7	165.9	11.1	16.7	28.1	11.1	2.8
11	38.905	3.2	39.039	30.985	30.7	189.7	192.9	11.1	16.7	30.0	12.7	3.3
12	45.641	3.2	45.774	37.246	37.1	201.6	204.8	12.7	190	32.5	12.7	3.8
13	52.654	3.2	52.787	43.589	43.4	217.5	220.7	12.7	19.0	35.7	15.9	4.3
14	59.533	3.2	59.666	49.841	49.8	232.6	235.8	14.2	21.4	41.2	19.0	4.8
15	66.408	3.2	66.541	56.186	56.1	245.3	248.5	14.2	21.4	44.4	22.2	5.3
16	73.292	3.2	73.425	62.441	62.2	260.4	263.6	15.8	23.8	50.0	25.4	5.8